PRO5 FRONT HUB ASSEMBLY
110mm_CENTRE_LOCK

PRO5

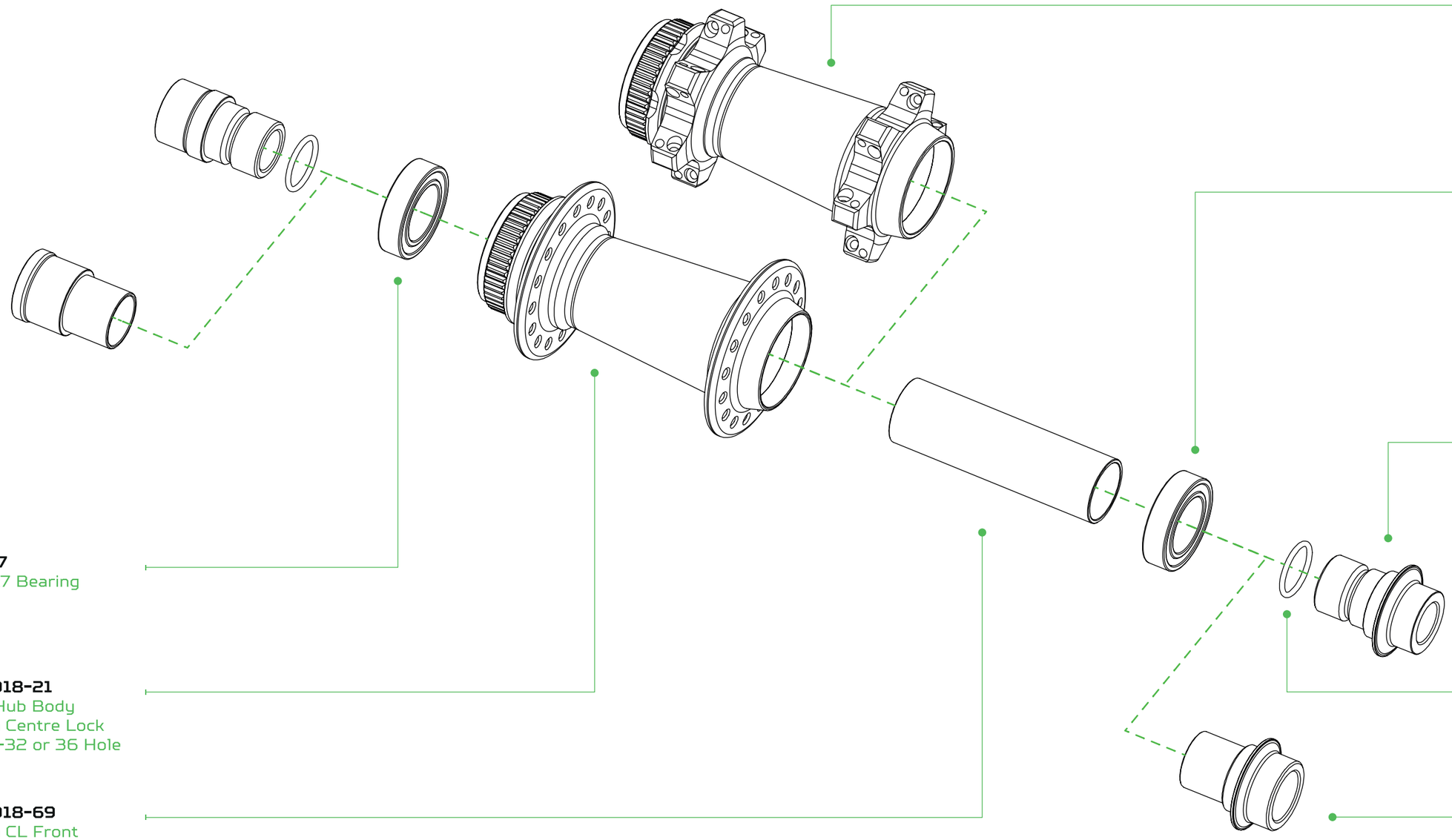

HUB1018-25
Front Hub Body
110mm Centre Lock
Straight Pull
24 Hole ONLY

S17287
17x28x7 Bearing

HUB488
Centre Lock Front Hub
Ø12mm Spacer Kit

S17287
17x28x7 Bearing

HUB1018-21
Front Hub Body
110mm Centre Lock
24-28-32 or 36 Hole

O'Ring
Ø14x1.5

HUB1018-69
110mm CL Front
Hub Centre Tube

HUB489
Centre Lock Front Hub
Ø15mm Spacer Kit

HOPETECH.COM